COPYRIGHT IS THE PROPERTY OF ALPINE & MUST NOT BE LOANED, COPIED OTHERWISE COMMUNICATED TO A THIRD PARTY WITHOUT PERMISSION AND IS SUBJECT TO RECALL AT ANY TIME.

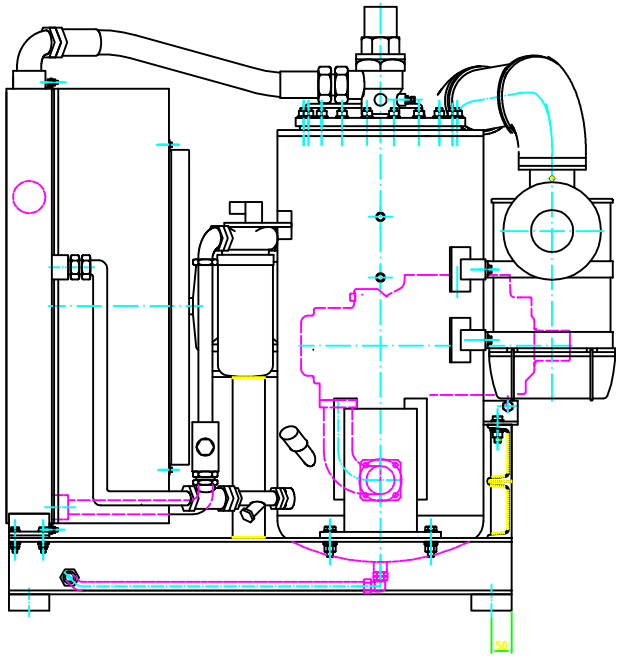

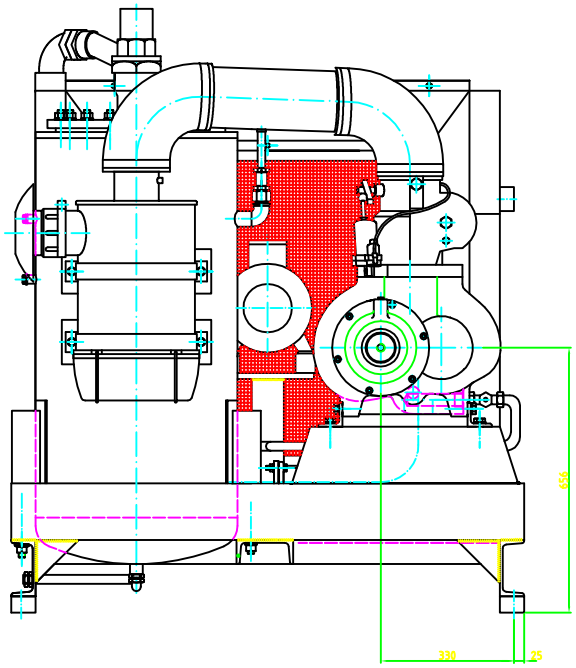

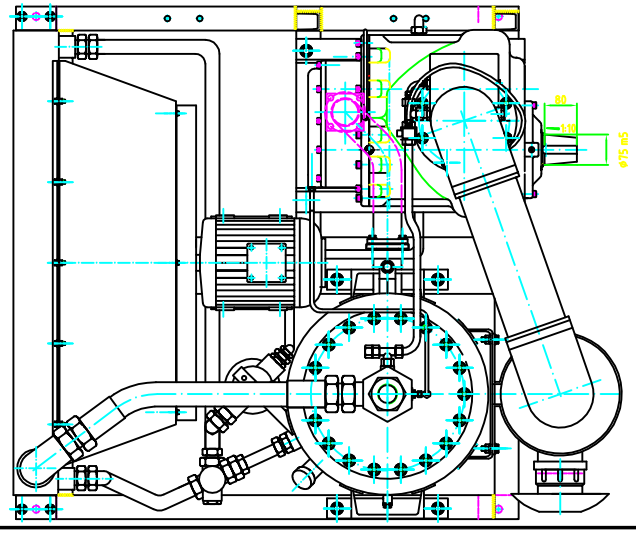

ALPINE INDUSTRIALCON (PRIVATE) LIMITED

305/2, G.T.ROAD, BAGHBANPURA, LAHORE-PAKISTAN

YP	UNLESS OTHERWISE SPECIFIED TOLERANCE DIMENSIONING ARE IN MM FRACTIONAL DECIMALS ANGLES	DWG	DESCRIPITION	
		DRAWN SALEEM	*SCREW COMP*	DWG NO:
		CHECKED		
		REVEIWED		
RH	FINAL PROTECTIVE FINISH:	APPROVED BY:		